REVISIONS				
ZONE	REV.	DESCRIPTION	DATE	APPROVED
	01	INITIAL RELEASE	7/3/2017	

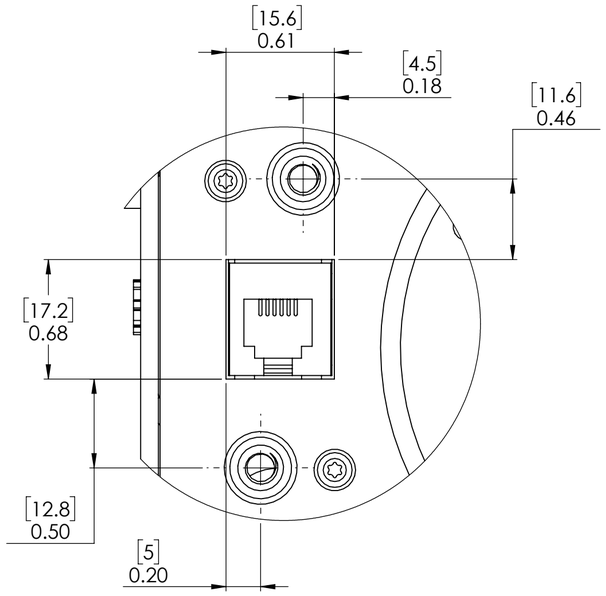

DETAIL A
SCALE 2 : 1.25

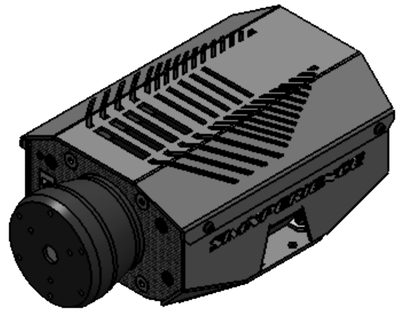

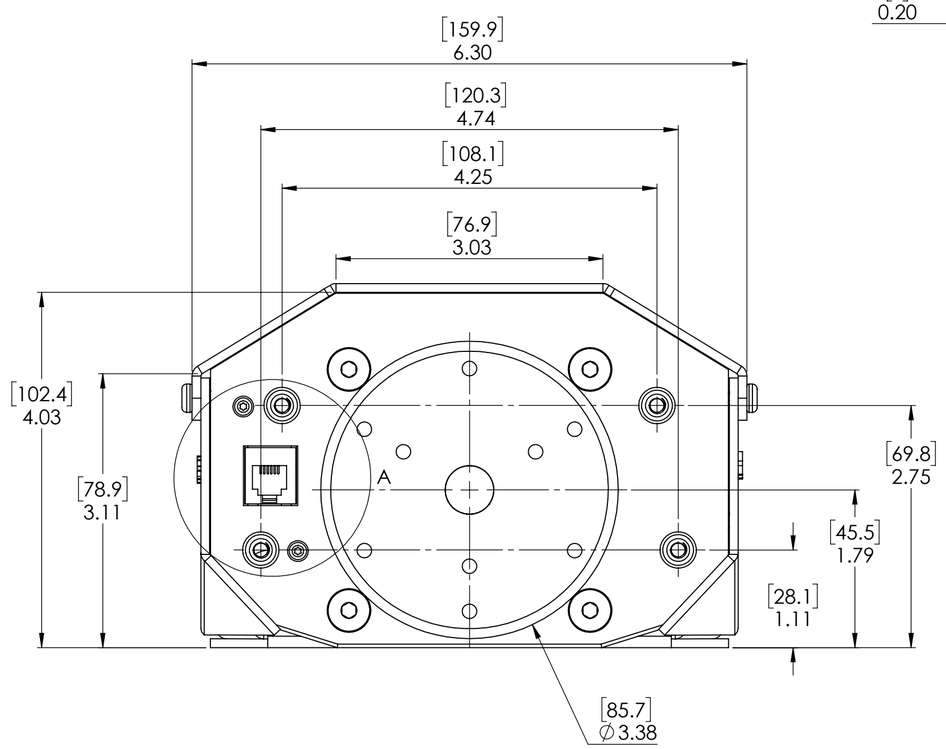

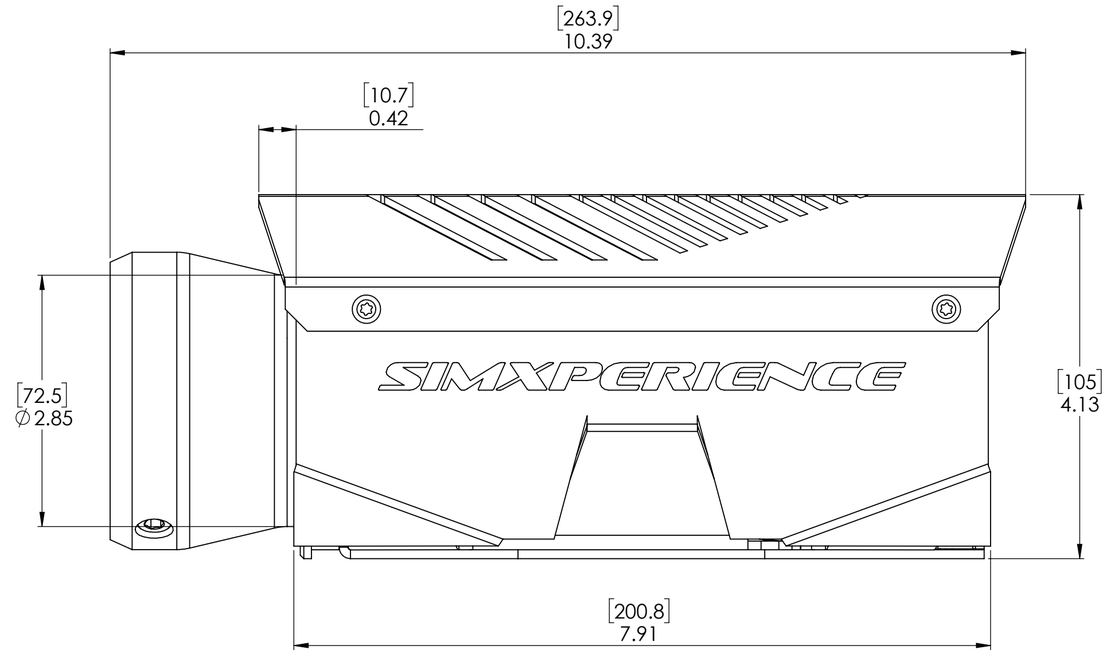

DIMENSIONS ARE IN INCHES [MILLIMETERS]
IMPERIAL TOLERANCES:
TWO PLACE: 0.012 in
THREE PLACE: 0.005 in
METRIC TOLERANCES:
ONE PLACE: [0.3 mm]
TWO PLACE: [0.13 mm]

FINISH:

DEBURR AND BREAK SHARP EDGES

DO NOT SCALE DRAWING

REVISION 01

SIMXPERIENCE

	NAME	SIGNATURE	DATE
DRAWN	PAT DOTSON		7/3/17
CHK'D			
APPV'D			
MFG			
Q.A			

MATERIAL:

WEIGHT:

TITLE:

ACCESSORY MOUNTING

DWG NO. Faceplate Mntg - SX-APV2-ASM.B

A2

SCALE:1:2

SHEET 1 OF 1